GEA LUCE

MICHELA P/P

DATA:
Watt: 2XE27 MAX 2X42W
Volt: 220-240V
IP: IP20
Classe 1

Base in metallo, particolari cromo. Diffusore in vetro colorato bianco. Finitura lucida. Lampadina non inclusa.

Metal FItting with chrome FInish. White coloured glass. Polish FInish. Bulb not included.

Base en métal, détails chromés. Diffuseur en verre blanc. Finition polie. Ampoule non incluse.
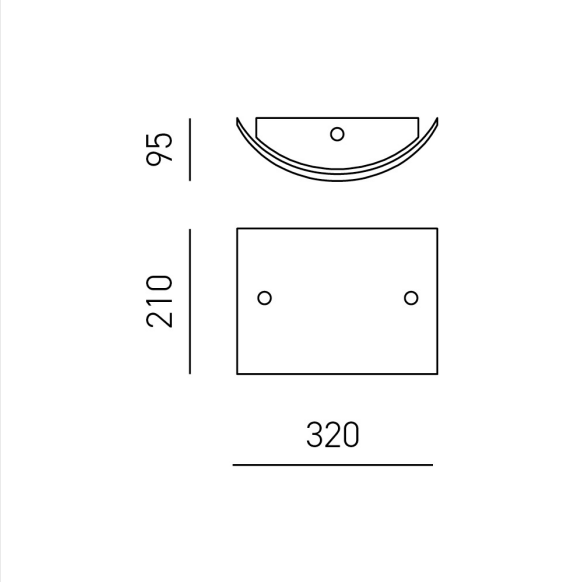
Fuß aus Metall, Chromdetails. Diffusor aus weißem Glas. Poliertes Finish. Glühbirne nicht enthalten.