GEA LUCE

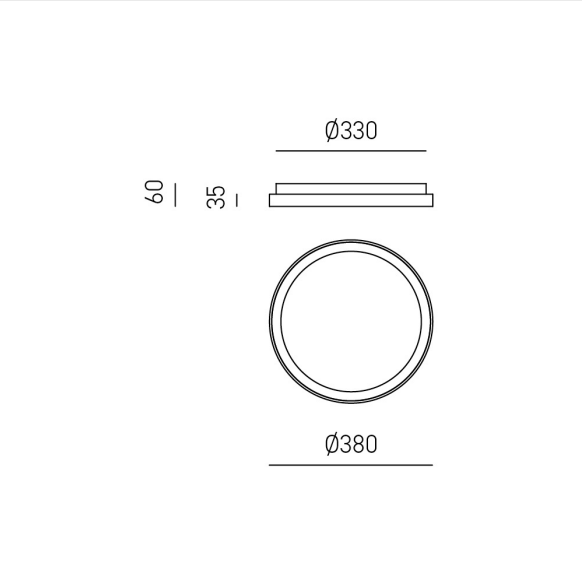

KRIZIA P/P 3000K

FKRPB1 - BIANCO - WHITE

TECHNICAL DATA
Watt: 30W
Lumen: 2600lm
Color temperature: 3000K
Volt: 220-240V
IP: IP20
CRI: >80
Life: 30.000h
Class: Classe 1

Montatura in alluminio satinato bianco. Diffusore in acrilico bianco opale. Sorgente luminosa led, dimmerabile tramite dimmer esterno+push (non incluso).

Frame in satin white aluminium. Opal white acrylic diffuser. Led light source. Dimmable via external dimmer +push (not included).

Monture en aluminium blanc satiné. Diffuseur en acrylique blanc opale. Source lumineuse à Led, dimmable via un variateur externe+poussoir (pas inclus).

Weißer satinierter Aluminiumrahmen. Opalweißer Acryldiffusor. Led-Lichtquelle, dimmbar über externen Dimmer+Push (nicht enthalten).

GEA LUCE

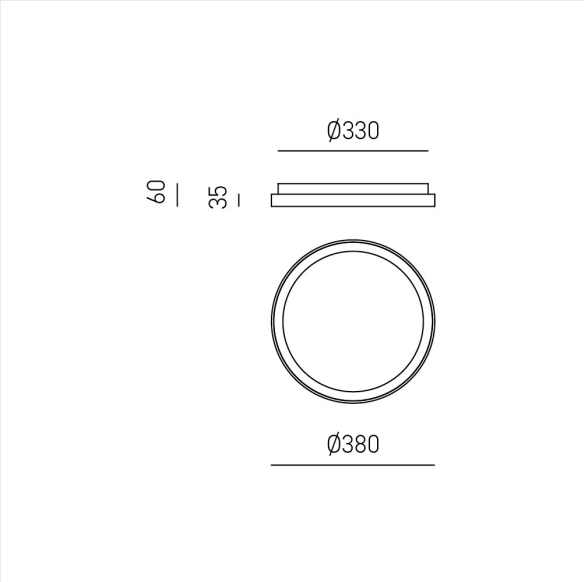

KRIZIA P/P 3000K

FKRPN1 - NERO - BLACK

TECHNICAL DATA
Watt: 30W
Lumen: 2400lm
Color temperature: 3000K
Volt: 220-240V
IP: IP20
CRI: >80
Life: 30.000h
Class: Classe 1

Montatura in alluminio satinato nero. Diffusore in silicone bianco opale. Sorgente luminosa led. dimmerabile tramite dimmer esterno + push (non inclusi).

Frame in satin black aluminium. Opal white acrylic diffuser. Led light source. Dimmable via external dimmer +push (not included).

Monture en aluminium noir satiné. Diffuseur en silicone blanc opale. Source lumineuse à Led . dimmable via un variateur externe + poussoir (pas inclus).

Schwarzer satinierter Aluminiumrahmen. Opalweißer Silikondiffusor. Led-Lichtquelle. dimmbar über externen Dimmer + Push (nicht enthalten).

GEA LUCE

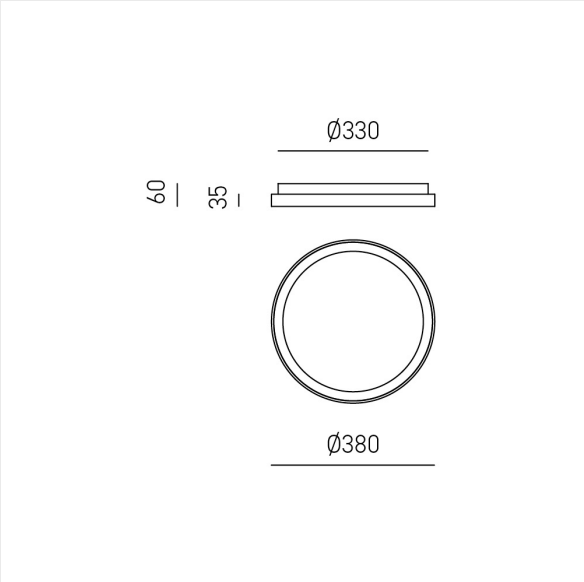

KRIZIA P/P 3000K

FKRPO1 - ORO - GOLD

TECHNICAL DATA
Watt: 30W
Lumen: 2500lm
Color temperature: 3000K
Volt: 220-240V
IP: IP20
CRI: >80
Life: 30.000h
Class: Classe 1

Montatura in alluminio oro spazzolato. Diffusore in acrilico bianco opale. Sorgente luminosa led, dimmerabile tramite dimmer esterno+push (non incluso).

Frame in brushed gold aluminium. Opal white acrylic diffuser. Led light source. Dimmable via external dimmer +push (not included).

Monture en aluminium doré brossé. Diffuseur en acrylique blanc opale. Source lumineuse LED, dimmable via un variateur externe+poussoir (pas inclus).

Gebürsteter goldener Aluminiumrahmen. Opalweißer Acryldiffusor. Led-Lichtquelle, dimmbar über externen Dimmer+Push (nicht enthalten).